KELLY TRACTOR®

IMT® INTERNATIONAL

A 290 K - Hydraulic Drill Rig

LCA version

Crowd cylinder version

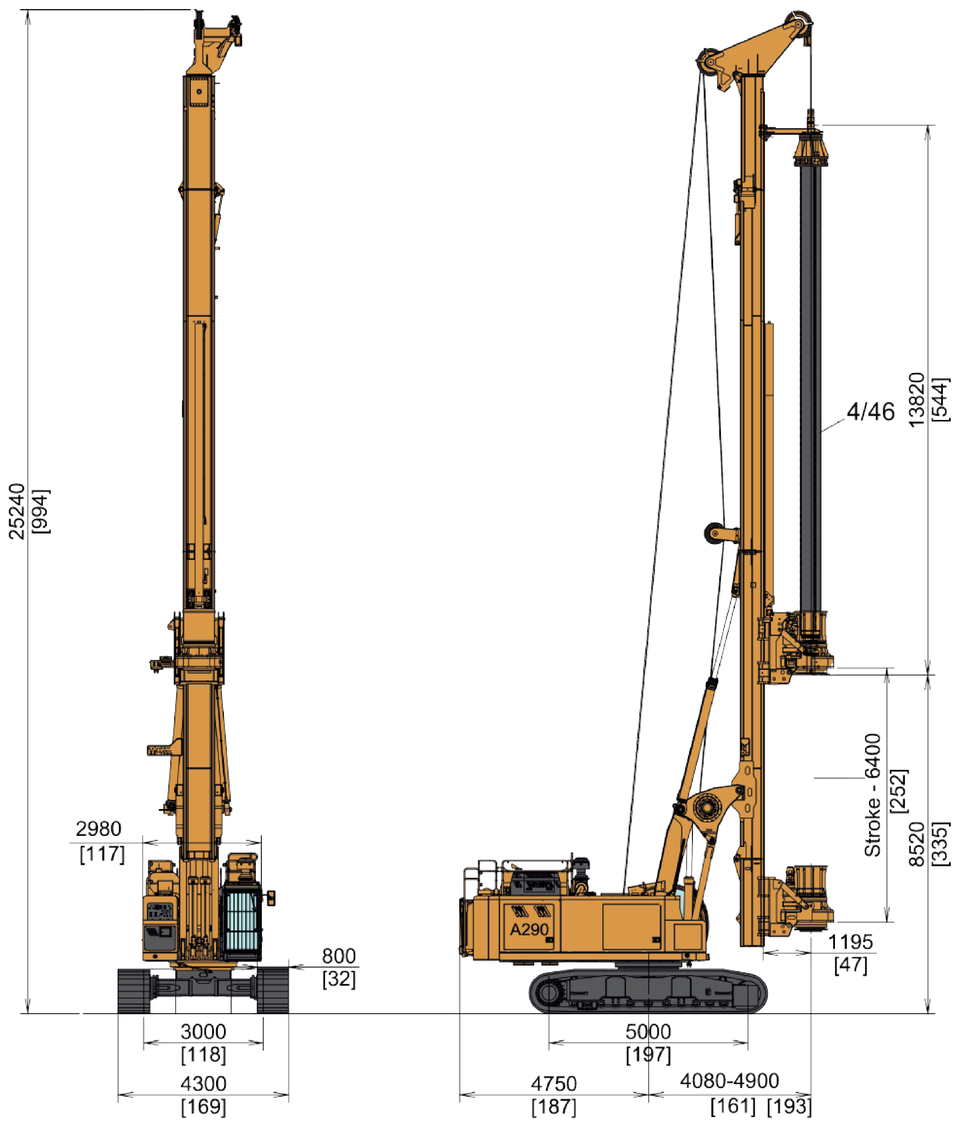

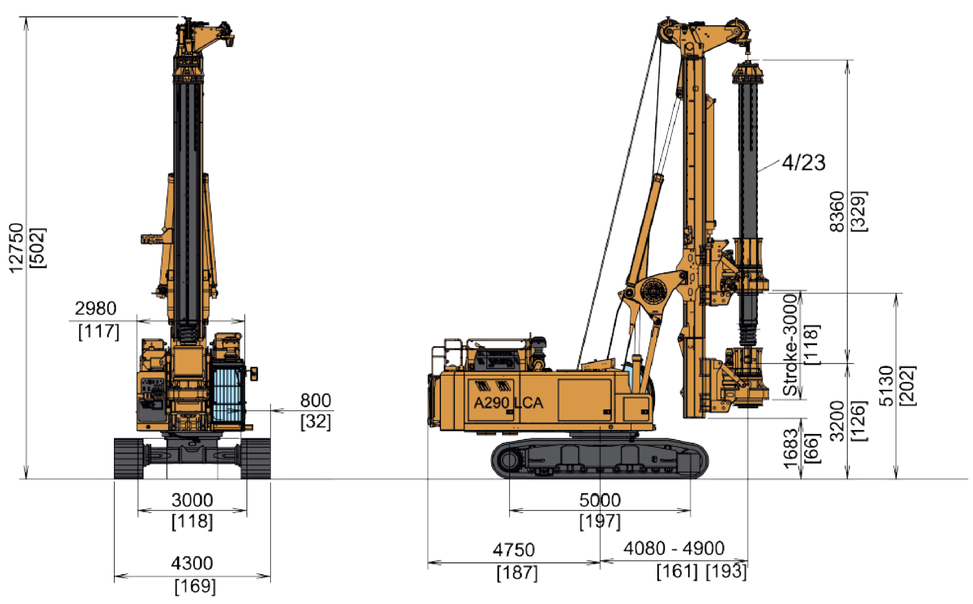

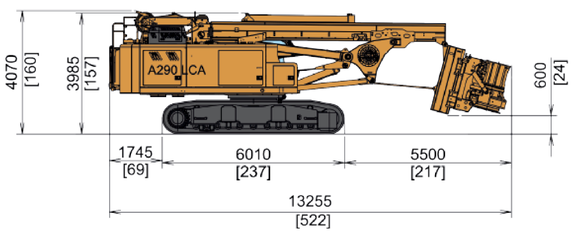

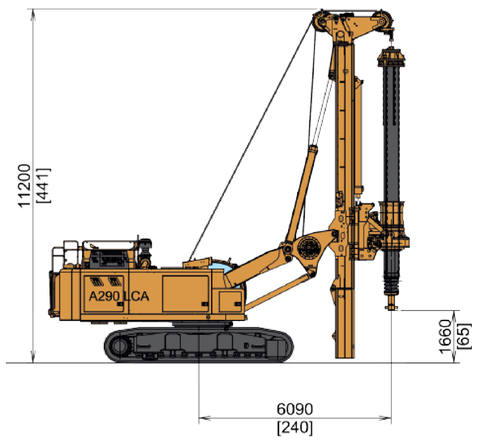

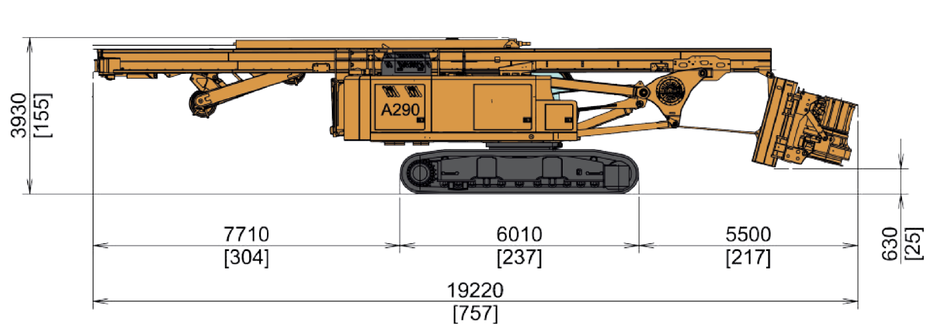

Technical specifications

A290 K Crowd Cylinder

Rotary		
Nominal torque	kNm	290
	lbf ft	213895
Min. Working speed	rpm	12
Max. Working speed	rpm	23
Min. Discharge speed	rpm	76
Max. Discharge speed	rpm	90

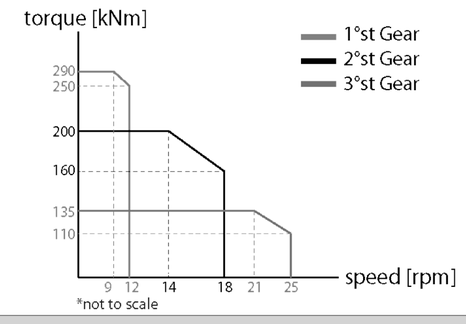

Winches		
Main winch pull force	kN	270
	lbf	60700
Main winch speed	m/min	58
	ft/min in	190 /
Auxiliary winch pull force	kN	120
	lbf	26980
Auxiliary winch speed	m/min	80
	ft/min	262
Crowd System		
Kelly crowd push	kN	300
	lbf	67450
Kelly crowd pull	kN	340
	lbf	76400
Stroke (mm)	mm	6400
	in	252
Base		**IMT**
Undercarriage length / widening range / shoe	mm	6010 / 3000 - 4300 / 800
	in	237 / 118 - 169 / 32
Engine type		CAT C13 /T4F STAGE V
		340 KW (462 HP) @ 1800 rpm T4F STAGE V
Kelly bar		
Standard		4/46
Options available		4/30 - 4/52 - 5/50 - 5/66 - 5/75
Operating Weight w/standard kelly bar	t (metric)	84,5
	lbs	186290

Removable parts for transport phase

Rotary Weight = 5,3 ton [11700 lb]

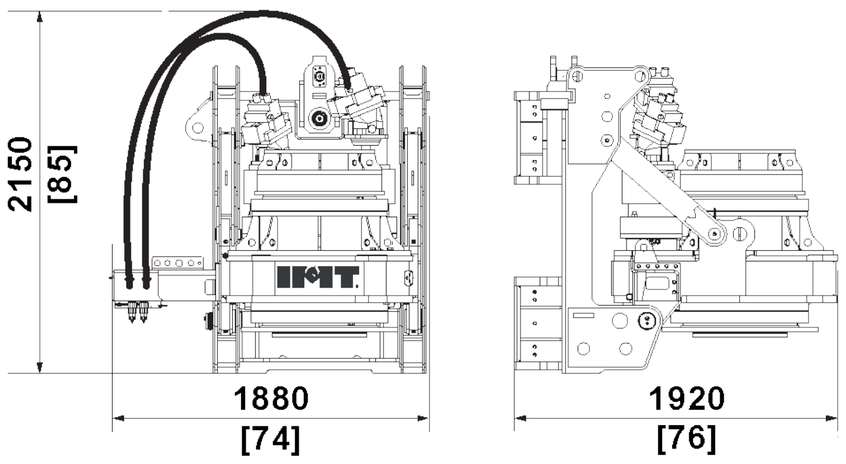

Counterweight Weight = 12,5 ton [27600 lb]

