24 MONTHS WARRANTY

# 6.21 RTH




MAGNI TELESCOPIC HANDLERS

**MAIN SECTORS**

INDUSTRY

CONSTRUCTION

Maximum lifting height: 68’ 3”
Maximum reach: 57’ 4”
Electronically controlled hydrostatic transmission
Automatic leveling device
Scissors stabilizers

| | | |
|---|---|---|
| MACHINE MODEL | Rotating telescopic handler | RTH 6.21 |
| | Maximum lifting capacity | 13,200 lbs (center of gravity 24 in) |
| | Maximum lifting height | 68′ 3″ |
| | Rotation | 360° (continuous) |
| ENGINE | Type | **Deutz TCD 3,6 L4<br>Tier 4f** |
| | Rated power | 100 kW (134 HP) @ 2,200 rpm |
| | Maximum torque | 500 Nm @ 1,600 rpm |
| | Displacement | 0.95 US gal |
| | Cylinders | 4 in line |
| | Engine configuration | Turbocharged direct injection diesel |
| | Cooling system | Water - intercooler |
| TRANSMISSION | Type | Hydrostatic |
| | Model | Danfoss / Rexroth |
| | Maximum pressure | 480 bar |
| | Displacements | Electronically controlled Variable displacement pump<br>Variable displacement motor |
| | Gear box | Dropbox, 2 speeds forward-reverse |
| AXLES AND BRAKES | Type | Axles with planetary gearboxes |
| | Rear axle | Steering and oscillating with hydraulic locking |
| | Front axle | Steering and oscillating and with levelling +/-8° |
| | Service brake | Hydraulically operated wet multi-disk brakes on each axle |
| | Parking brake | Hydraulic with negative action |
| | Tyres dimensions | 445/65 R22,5 |
| PERFORMANCE | Max. travel speed | 25 Mph |
| | Drawbar pull | 72 kN |
| | Gradeability | 41% |
| | Turning radius (end of forks) | 232″ |
| WEIGHTS | Total unladen | 38,800 lbs |
| | Front axle unladen (boom retracted and lowered) | 17,640 lbs |
| | Rear axle unladen (boom retracted and lowered) | 21,165 lbs |
| TANK AND SYSTEM CAPACITIES | Fuel tank | 46.2 US gal |
| | AdBlue | 2.6 US gal |
| | Hydraulic oil tank | 43.6 US gal |
| | Engine oil tank | 2.4 US gal |
| | Cooling liquid | 5.3 US gal |
| HYDRAULIC CIRCUIT FOR MOVEMENTS | Max. operating system pressure | 350 bar |
| | Circuit type | Load sensing |
| | Service pump | Danfoss / Casappa – Variable displacement |
| | Controls for boom and turret movements | Danfoss – SIL 2 electro-proportional valve |
| | Controls for stabilizers | Bosch Rexroth - Electro-hydraulics controls |
| | Movements control | 2 no. two-axis Danfoss joysticks with deadman safety device - Managed via CAN bus |
| STANDARDS MET | EN 1459-2: concerning standards for slewing variable-reach trucks<br>EN 13000: concerning standards for hydraulic cranes<br>EN 280: concerning standards for mobile elevating work platforms<br>FOPS/ROPS<br>EU 2016/1628: concerning engine emissions standards | |

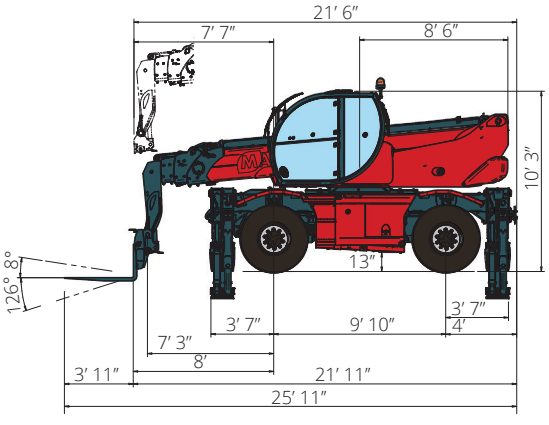


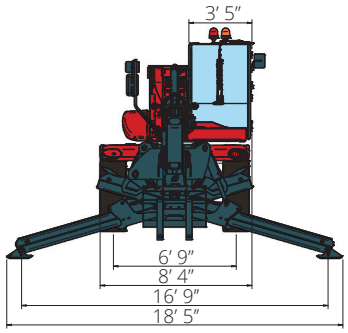


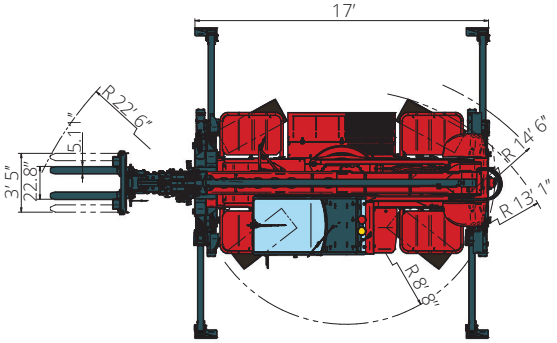


The data in this brochure are informative and subject to change without notice



REV09

## ON STABILIZERS

### **360°** LOAD CHART
### ON FULLY **EXTENDED STABILIZERS**

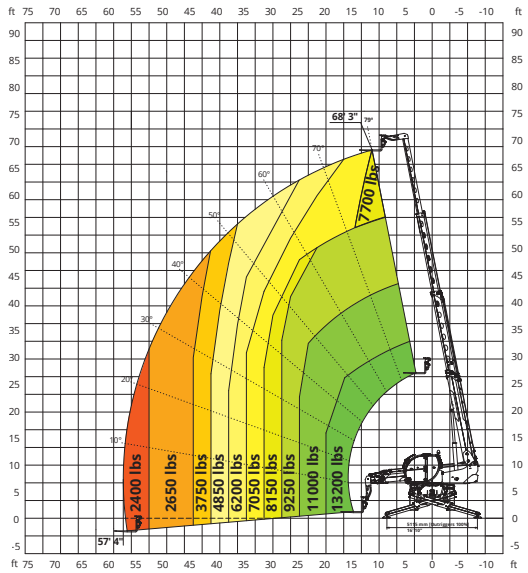


## ON TIRES

### **FRONT** LOAD CHART **ON TIRES**

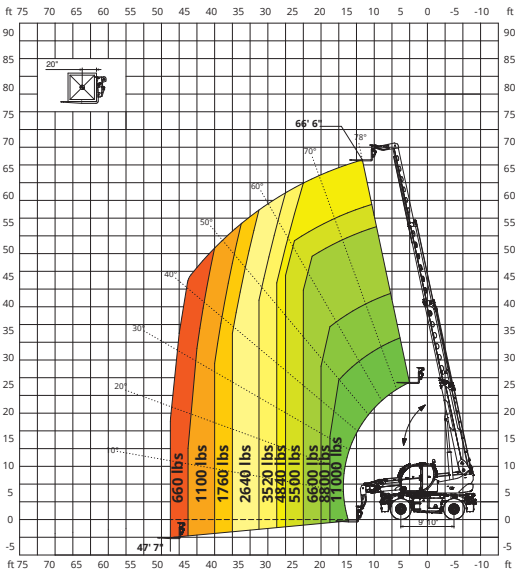


## W 3,5

### WINCH **7,700 lbs**

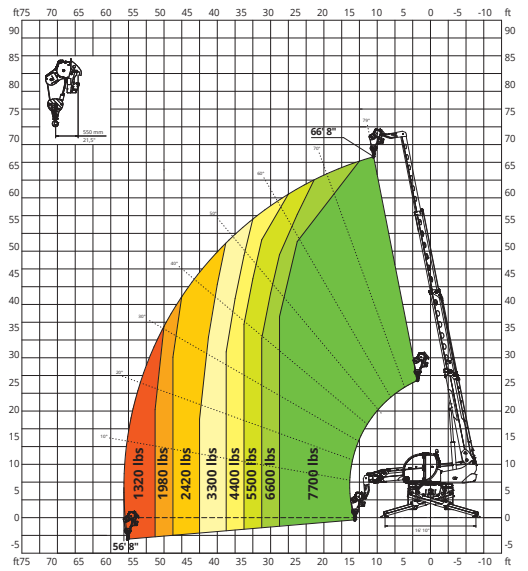


## W 6

### WINCH **13,200 lbs**

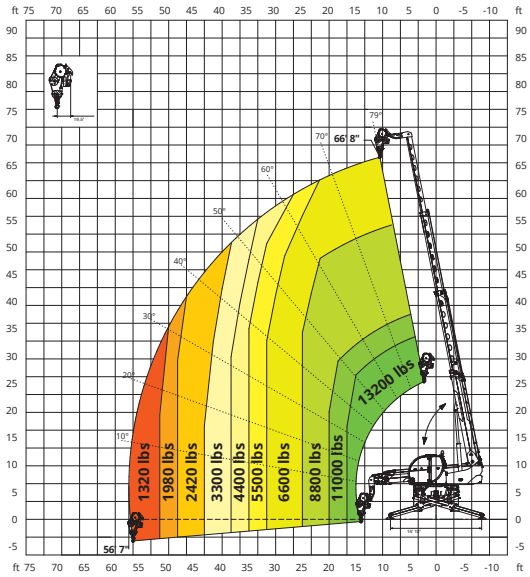


## JW 1500

### JIB WINCH **3,300 lbs**

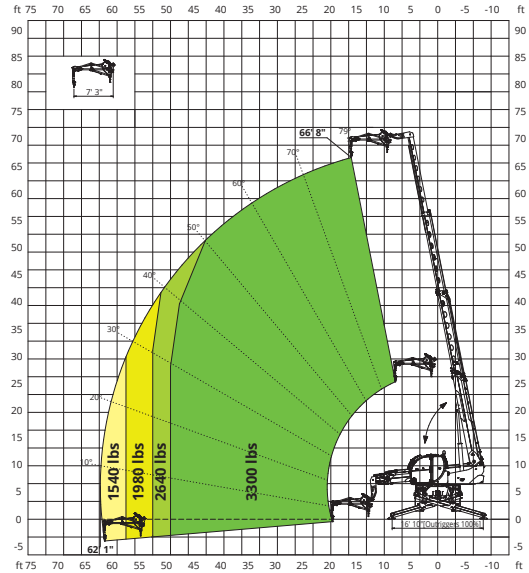


## JW 2000

### JIB WINCH **4,400 lbs**

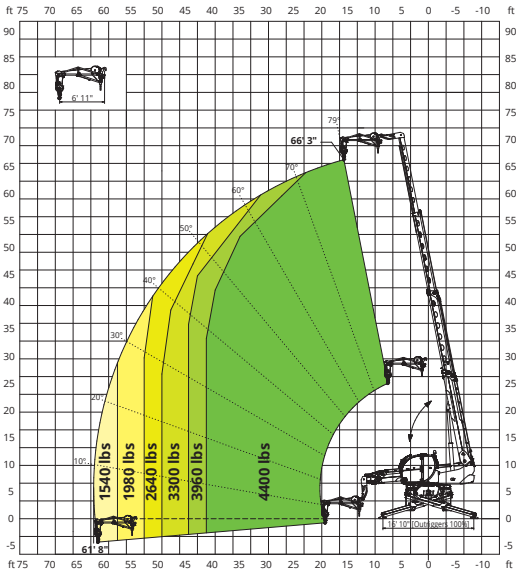

## JW 3000

JIB WINCH **6,600 lbs**

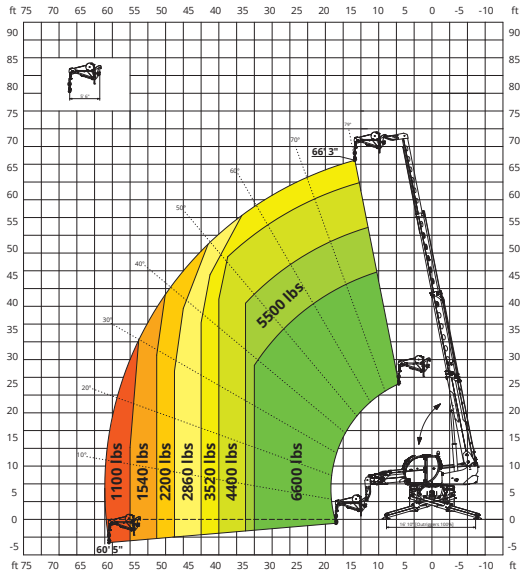


## J 2000

JIB **4,400 lbs**

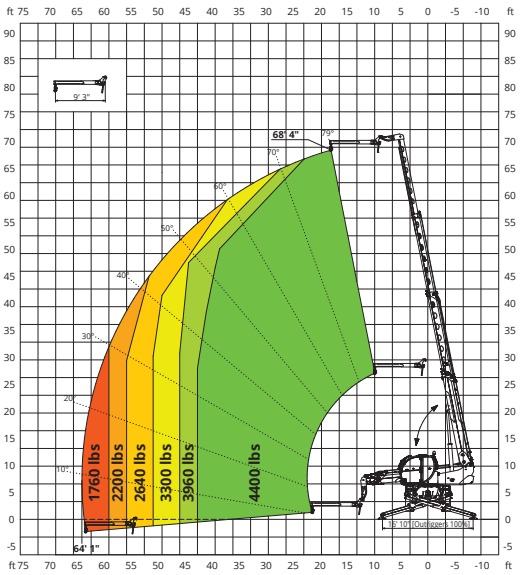


## H 6

HOOK **13,200 lbs**

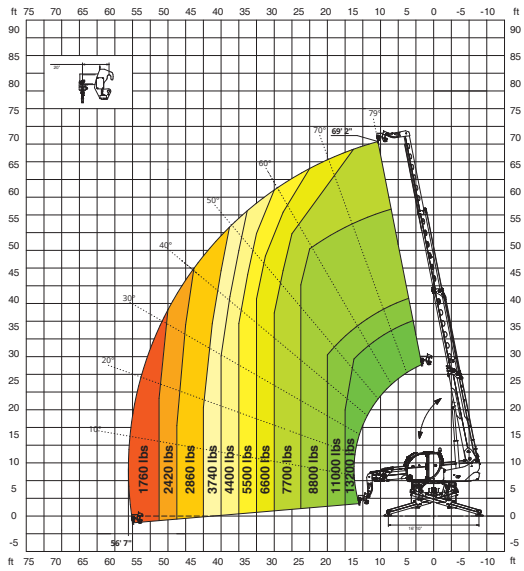


## REP 2-4,5

ROTATING EXTENDABLE BASKET **1,100 lbs**

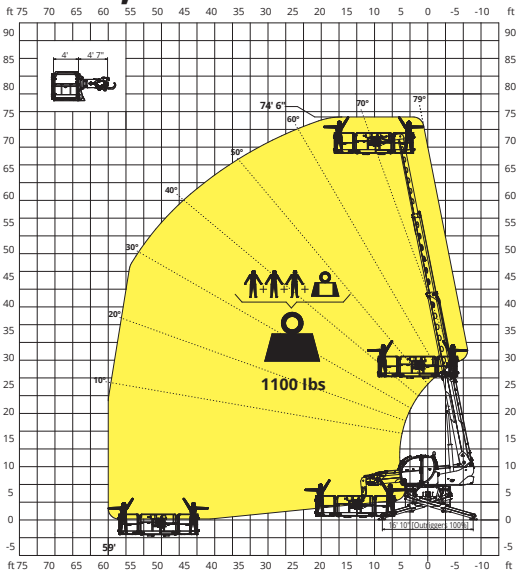


## REP 10.2-4,7

ROTATING EXTENDABLE BASKET **2,200 lbs**

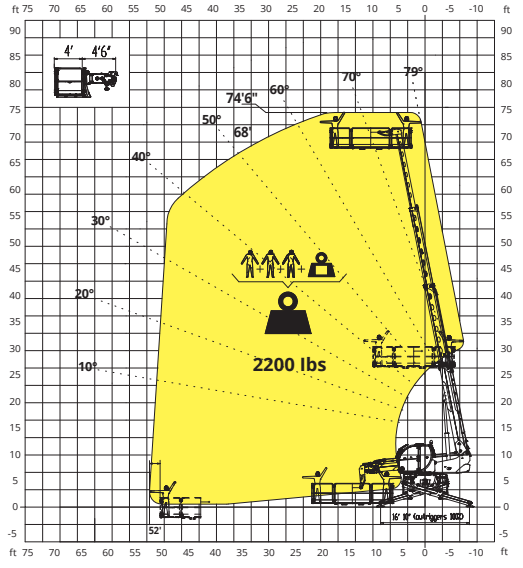


## REP 8.2-4,7 W0,3

ROTATING BASKET **1,780 lbs**
WITH WINCH **660 lbs**

