24 MONTHS WARRANTY

6.25 RTH



MAGNI
TELESCOPIC HANDLERS

MAIN SECTORS

INDUSTRY CONSTRUCTION

Maximum lifting height: 82’
Maximum reach: 69’ 10”
Electronically controlled hydrostatic transmission
Automatic leveling device
Scissors stabilizers

MACHINE MODEL	Rotating telescopic handler	RTH 6.25
	Maximum lifting capacity	13,200 lbs (center of gravity 24 in)
	Maximum lifting height	82’
	Rotation	360° (continuous)
ENGINE	Type	**Deutz TCD 3,6 L4 Tier 4f**
	Rated power	100 kW (134 HP) @ 2,200 rpm
	Maximum torque	500 Nm @ 1,600 rpm
	Displacement	0.95 US gal
	Cylinders	4 in line
	Engine configuration	Turbocharged direct injection diesel
	Cooling system	Water - intercooler
TRANSMISSION	Type	Hydrostatic
	Model	Danfoss / Rexroth
	Maximum pressure	480 bar
	Displacements	Electronically controlled variable displacement pump Variable displacement motor
	Gear box	Dropbox, 2 speeds forward-reverse
AXLES AND BRAKES	Type	Axles with planetary gearboxes
	Rear axle	Steering and oscillating with hydraulic locking
	Front axle	Steering and oscillating and with levelling +/-8°
	Service brake	Hydraulically operated wet multi-disk brakes on each axle
	Parking brake	Hydraulic with negative action
	Tyres dimensions	445/65 R22,5
PERFORMANCE	Max. travel speed	25 Mph
	Drawbar pull	72 kN
	Gradeability	41%
	Turning radius (end of forks)	251”
WEIGHTS	Total unladen	39,680 lbs
	Front axle unladen (boom retracted and lowered)	17,860 lbs
	Rear axle unladen (boom retracted and lowered)	21,825 lbs
TANK AND SYSTEM CAPACITIES	Fuel tank	46.2 US gal
	AdBlue	2.6 US gal
	Hydraulic oil tank	43.6 US gal
	Engine oil tank	2.4 US gal
	Cooling liquid	5.3 US gal
HYDRAULIC CIRCUIT FOR MOVEMENTS	Max. operating system pressure	350 bar
	Circuit type	Load sensing
	Service pump	Danfoss / Casappa – Variable displacement
	Controls for boom and turret movements	Danfoss – SIL 2 electro-proportional valve
	Controls for stabilizers	Bosch Rexroth - Electro-hydraulics controls
	Movements control	2 no. two-axis Danfoss joysticks with deadman safety device - Managed via CAN bus
STANDARDS MET	EN 1459-2: concerning standards for slewing variable-reach trucks EN 13000: concerning standards for hydraulic cranes EN 280: concerning standards for mobile elevating work platforms FOPS/ROPS EU 2016/1628: concerning engine emissions standards	

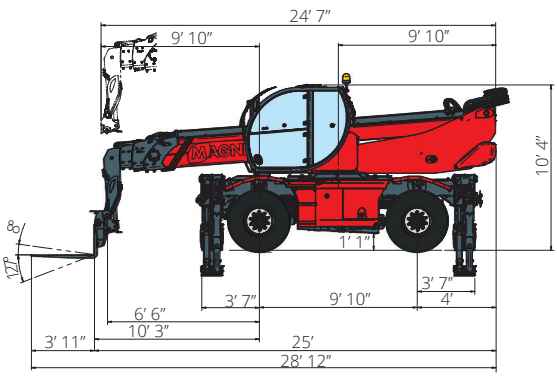

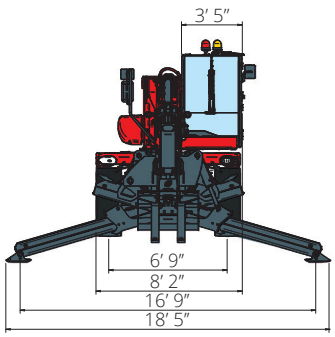

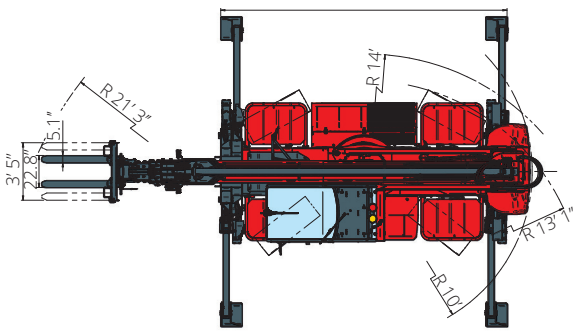

The data in this brochure are informative and subject to change without notice

REV09

ON STABILIZERS

360° LOAD CHART
ON FULLY **EXTENDED STABILIZERS**

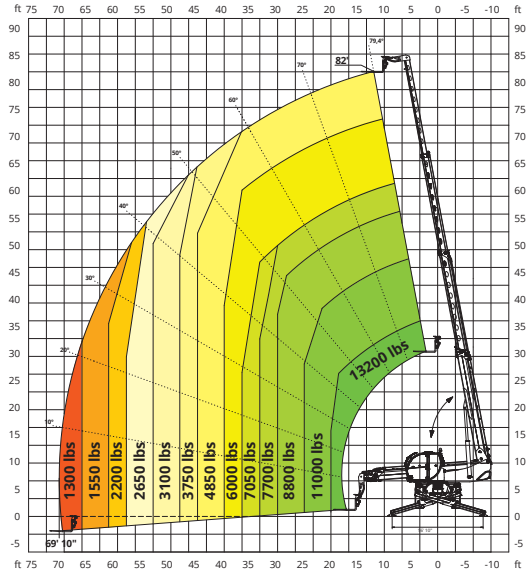

ON TIRES

FRONT LOAD CHART **ON TIRES**

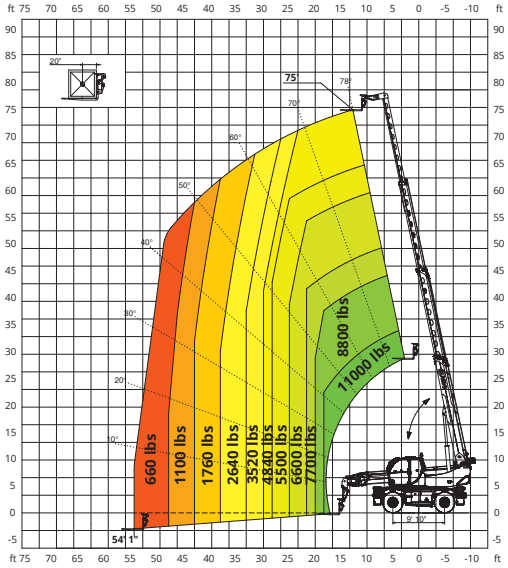

W 3,5

WINCH **7,700 lbs**

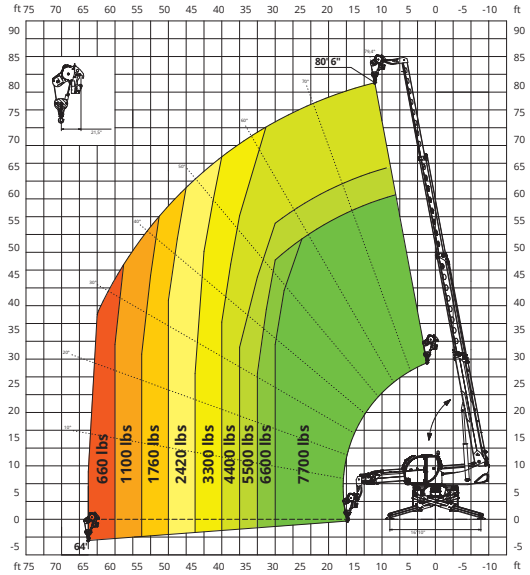

W 6

WINCH **13,200 lbs**

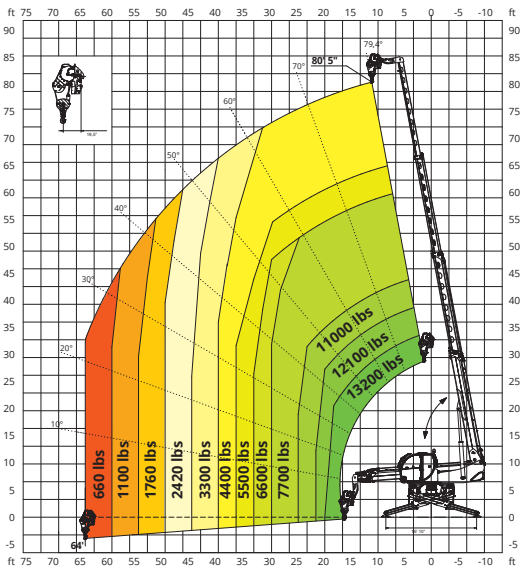

JW 1500

JIB WINCH **3,300 lbs**

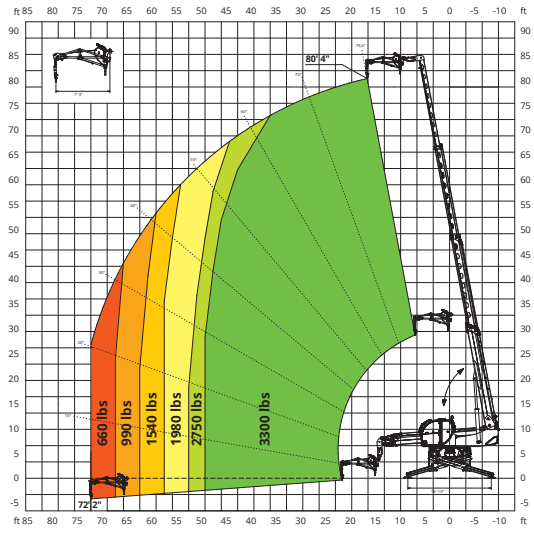

JW 2000

JIB WINCH **4,400 lbs**

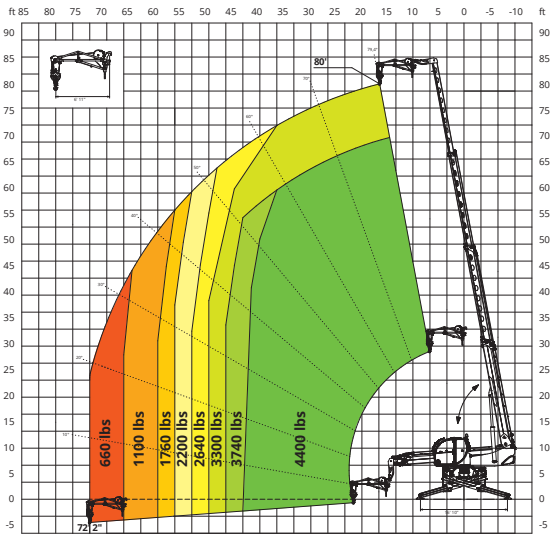

JW 3000

JIB WINCH **6,600 lbs**

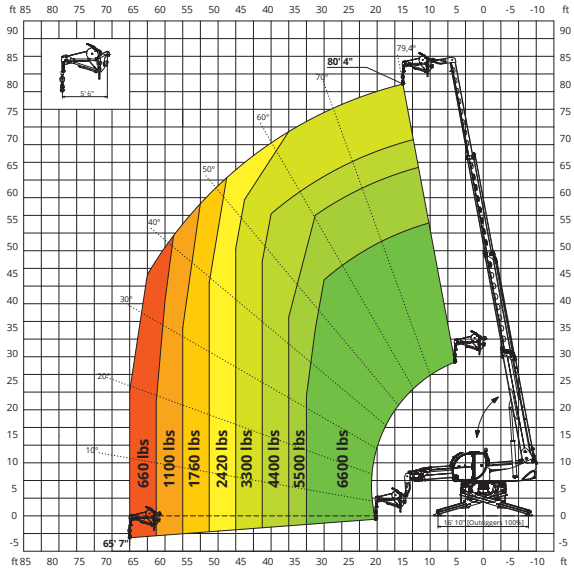

J 2000

JIB **4,400 lbs**

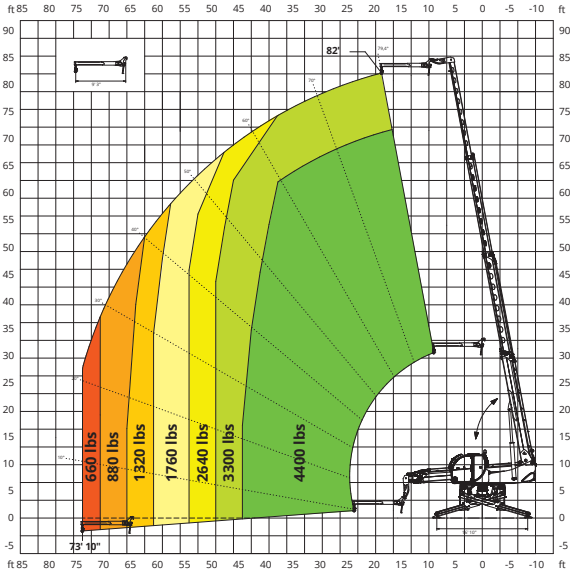

H 6

HOOK **13,200 lbs**

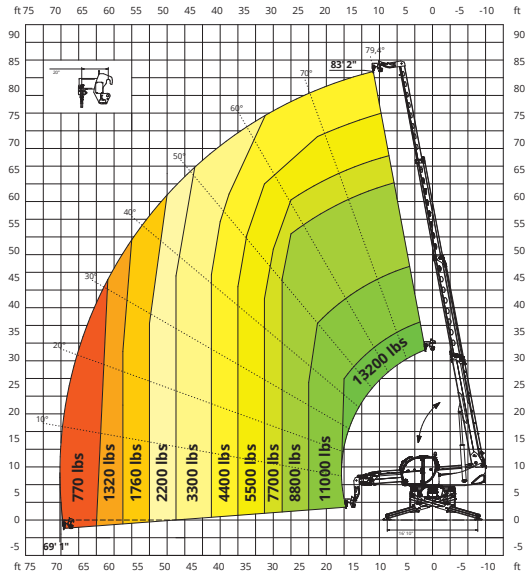

REP 2-4,5

ROTATING EXTENDABLE BASKET **1,100 lbs**

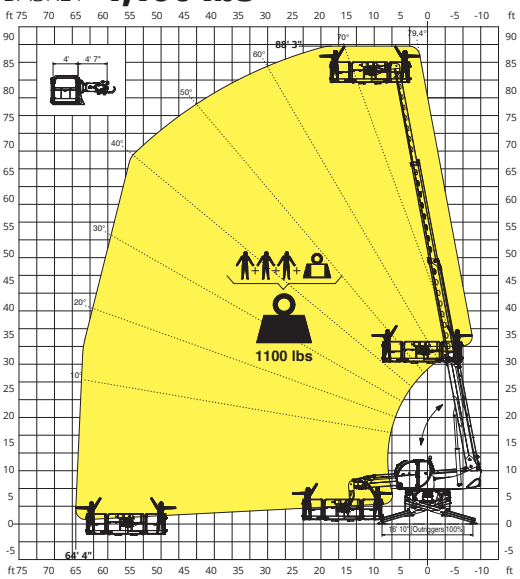

REP 10.2-4,7

ROTATING EXTENDABLE BASKET **2,200 lbs**

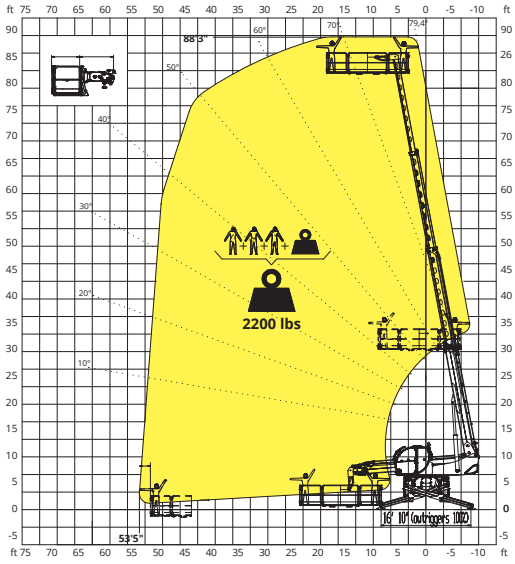

REP 8.2-4,7 W0,3

ROTATING BASKET **1,780 lbs**
WITH WINCH **660 lbs**

