INTERSTATE 14BST

1101 Heritage Pkwy
Mansfield, TX 76063
1-800-433-5384

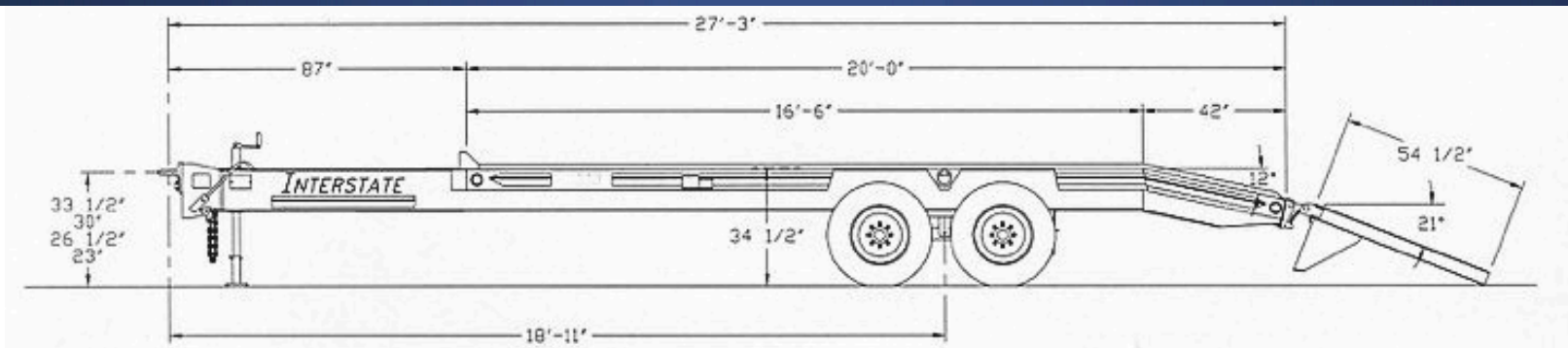

Product Specifications

Load Capacity	Trailer Weight	Overall Length	Deck Width	Deck Length
14,000 lbs.	4,750 lbs.	27'3"	8'6"	20'0" (16'6" flat deck + 3'6" beavertail)

Frame Construction	Main beams: W12" x 16 lbs per ft., grade 50 Hi-tensile Crossmembers: 6" I-beam x 3.7 lbs per ft., run between main rails on 24" centers
Ramps	60" x 21.5" traction with spring assist
Decking	2" nominal oak
Headboard	2" x 5" rectangular tube, full width of trailer
Tie Downs	(6) heavy duty D-rings, 3 per side

Suspension	Multi-point spring with equalizers
Axles	(2) 7,000lb capacity with oil bath hubs
Brakes	12 ¼" x 2" electric with integral break away system
Tires	(4) 215/75R17.5 (H)
Wheels	8 hole steel disc
Jack	12,000 lbs side crank
Hitch	4 position cast steel pintle eye 1-5/8" stock, 2 7/8" I.D.
Lights	Flush mounted LED in rubber grommets Modular wiring harness with 7-way plug
Paint	Black urethane Rust prohibitive undercoating Available: Black, White, Red, Yellow, or Gray



Options

- Ramps (wood/traction, upright)
- Additional deck lengths
- Gooseneck
- Paint color matching or galvanizing
- Polished aluminum wheels
- Hydraulic jacks
- Toolbox lid or enclosure
- Tire upgrade
- Additional D-rings
- Apitong decking
- Hubodometer
- Spare tire/carrier

For more information visit our Website at www.interstatetrailers.com or call 1-800-433-5384