INTERSTATE 20BST/S

1101 Heritage Pkwy
Mansfield, TX 76063
1-800-433-5384

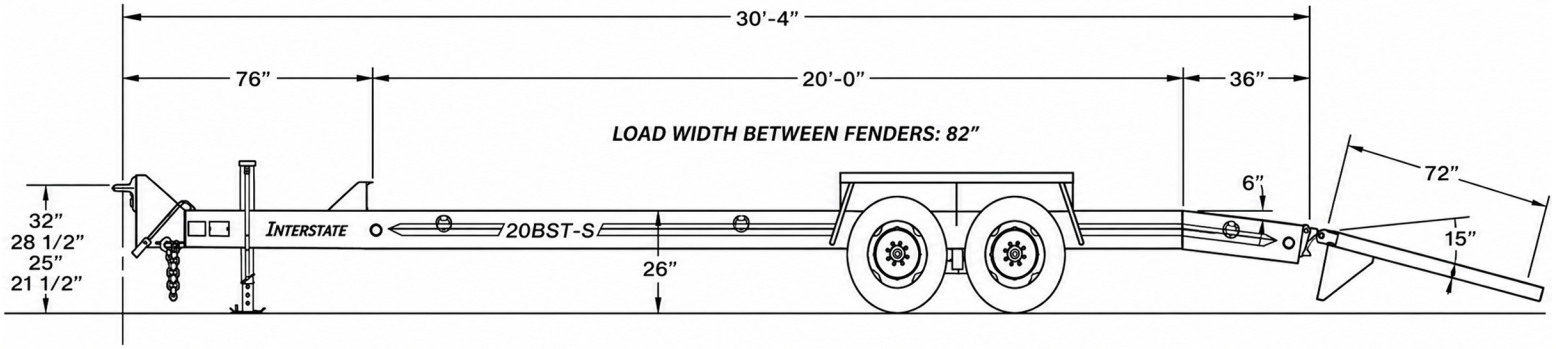

Product Specifications

Load Capacity	Trailer Weight	Overall Length	Overall Width	Deck Width	Deck Length
20,000 lbs.	5,300 lbs.	30'-4"	8'6"	82" between fenders	23'-0" (20' Flat deck + 3' Beavertail)

Frame Construction	Main beams: C8" x 13.75 lbs per ft., grade A36 Hi-tensile Crossmembers: 6" I-beam x 3.9 lbs. per ft., run between main rails on 22" centers
Ramps	60" x 21" traction with spring assist
Decking	2" nominal oak
Headboard	8" channel full width of trailer
Tie Downs	(6) heavy duty D-rings, 3 per side

Suspension	Rubber Torsion
Axles	(2) 10,000lb capacity with oil bath hubs
Brakes	12 1/4" x 3 3/8" electric with integral break away system
Tires	(4) 235/75R17.5 (J)
Wheels	8 hole steel disc
Jack	12,000 lb side crank
Hitch	4 position cast steel pintle eye 1-5/8" stock, 3" I.D.
Lights	Flush mounted LED in rubber grommets Modular wiring harness with 7-way plug
Paint	Black urethane Rust prohibitive undercoating Available: Black, White, Red, Yellow, or Gray



Options

- Ramps (wood/traction, upright)
- Additional deck lengths
- Gooseneck
- Paint color matching or galvanizing
- Polished aluminum wheels
- Hydraulic jacks
- Toolbox lid or enclosure
- Tire upgrade
- Additional D-rings
- Apitong decking
- Hubodometer
- Spare tire/carrier

For more information visit our Website at www.interstatetrailers.com or call 1-800-433-5384