INTERSTATE 20TDA

1101 Heritage Pkwy
Mansfield, TX 76063
1-800-433-5384

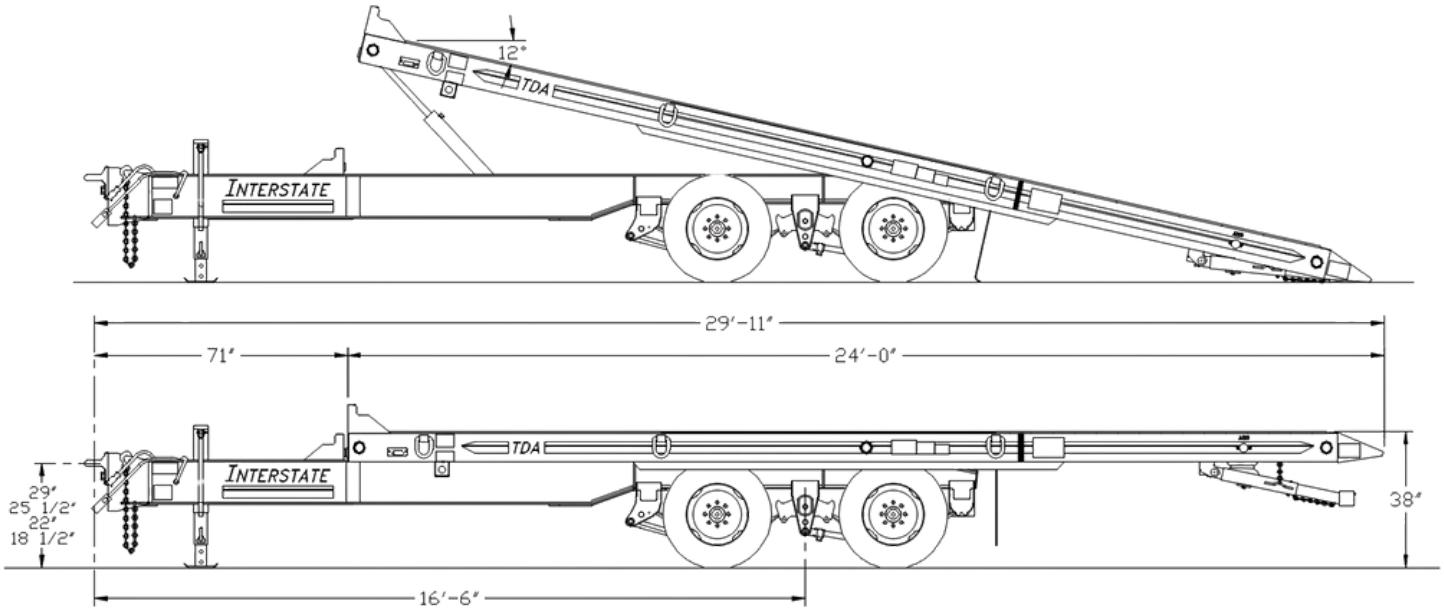

Product Specifications

Load Capacity	Trailer Weight	Overall Length	Deck Width	Deck Length
20,000 lbs.	5,900 lbs	29'11"	8'6"	24'0" tilt deck

Frame Construction	Pierced mainbeam construction with one piece interlocking crossmembers Mainbeams: (2)W12" x 19 lbs. per ft grade 50 Hi-tensile Main beams tilt platform: (2) W8" x 15lbs. per ft., grade 50 Hi-tensile Crossmembers: S6" I-beam x 12.5 lbs per ft., grade 50 Hi-tensile on 22" centers Siderails: C8" x 13.75 lbs per ft grade 50 Hi-tensile
Underride guard	Meets "National Highway Traffic Safety Administration" mandates FMVSS-223 & FMVSS-224
Decking	2" nominal oak
Headboard	8"x3" rectangular tube, full width of trailer
Tie Downs	(8) heavy duty D-rings, 4 per side

Axles	(2) 10,000 lb. capacity with oil bath hubs
Brakes	12 ¼" x 4" Air with ABS spring brakes
Tires	(8) 235/80R16 (E)
Wheels	8 hole steel disc
Jack	12,000 lb dropleg sidecrank
Hitch	4 position cast steel pintle eye 1-5/8" stock, 2 7/8" I.D.
Lights	Flush mounted LED in rubber grommets Modular wiring harness with 7-way plug
Paint	Black urethane Rust prohibitive undercoating Available: Black, White, Red, Yellow, or Gray
Suspension	Multi point spring with equalizers



Options

- Additional deck lengths
- Gooseneck
- Paint color matching or galvanizing
- Tire upgrade
- Spare tire/carrier
- Polished aluminum wheels
- Dual 2-speed jacks
- Hydraulic jacks
- Toolbox lid or enclosure
- Additional D-rings
- Apitong decking
- Bucket plate/well
- Hubodometer

For more information visit our Website at www.interstatetrailers.com or call 1-800-433-5384