INTERSTATE 40DLA

1101 Heritage Pkwy
Mansfield, TX 76063
1-800-433-5384

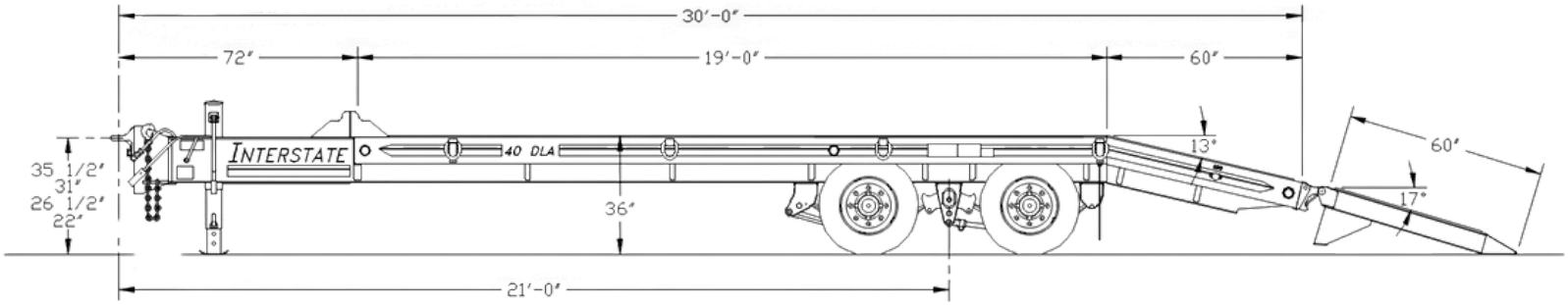

Product Specifications

Load Capacity	Trailer Weight	Overall Length	Deck Width	Deck Length
40,000 lbs.	7,600 lbs.	30'0"	8'6"	24'0" (19'0" flat deck + 5'0" beavertail)

Frame Construction	Pierced mainbeam construction with one piece interlocking crossmembers Mainbeams: W14" x 22lbs. per ft., grade 50 Hi-tensile Crossmembers: 6" I-beam x 3.9 lbs per ft., 80 KSI tensile strength on 22" centers Siderails: C8" x 11.5lbs per ft. Grade 50 Hi-tensile
Ramps	60" x 22" wood-filled with spring assist
Decking	2" nominal oak
Headboard	8" channel, full width of trailer
Tie Downs	(8) heavy duty D-rings, 4 per side

Suspension	Hutch 9,700 multi-point spring with radius rod axle tracking adjustment, 44,000 lb. capacity
Axles	(2) 25,000 lb. capacity with oil bath hubs
Brakes	12- 1/4" x 7-1/2" air with "Wabco" anti-lock braking system and spring parking brakes
Tires	(8) 215/75R17.5, (H)
Wheels	8 hole, hub piloted steel disc
Jack	25,000 lb. 2 speed, side crank
Hitch	4 position cast steel pintle eye, 1-5/8" stock, 3" I.D.
Lights	Flush mounted LED in rubber grommets Modular wiring harness with 7-way plug
Paint	Black urethane Rust prohibitive undercoating Available: Black, White, Red, Yellow, or Gray



(Shown with optional air ramps)

Options

- Ramps (Air, hydraulic, bi-fold, traction)
- Additional deck lengths
- Gooseneck
- Paint color matching or galvanizing
- Tire upgrade
- Polished aluminum wheels
- Dual 2-speed jacks
- Hydraulic jacks
- Toolbox lid or enclosure
- Tire upgrade
- Additional D-rings
- Apitong decking
- Double break beavertail
- Bucket plate/well
- Hubodometer

For more information visit our Website at www.interstatetrailers.com or call 1-800-433-5384