INTERSTATE 40TDL

1101 Heritage Pkwy
Mansfield, TX 76063
1-800-433-5384

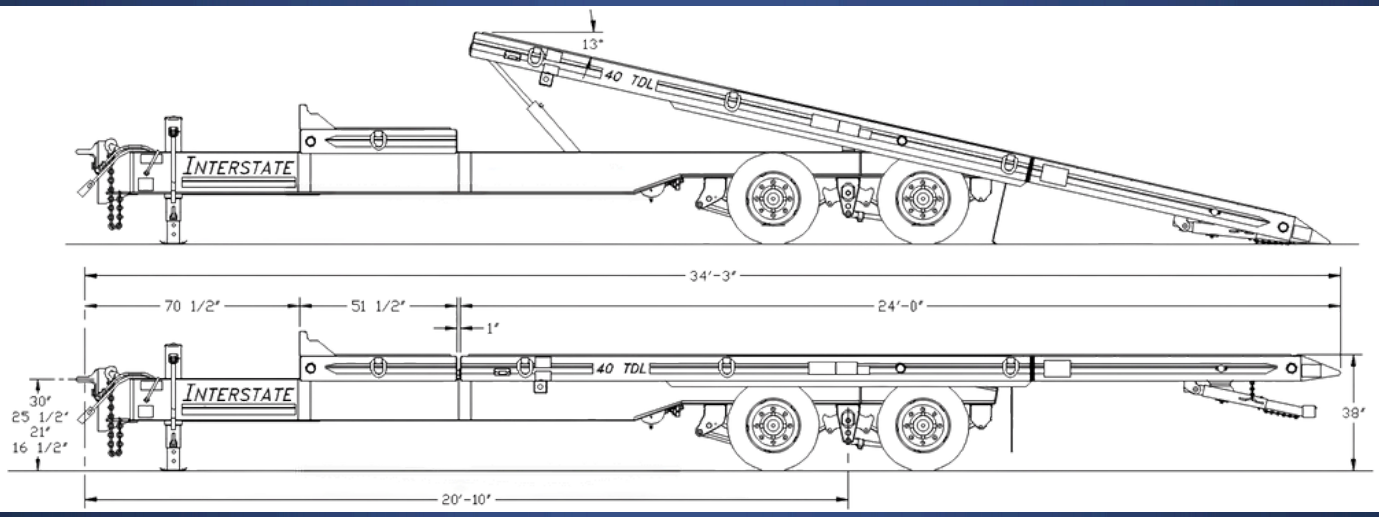

Product Specifications

Load Capacity	Trailer Weight	Overall Length	Deck Width	Deck Length
40,000 lbs.	9,400 lbs.	34'3"	8'6"	24'0" tilting platform 51.5" stationary deck

Frame Construction	Pierced main beam construction with one piece interlocking crossmembers *Main beam chasis*: (2) W14" x 26 lbs. per ft., grade 50 Hi-tensile Main beam tilt platform: (2) W8 x 15 lbs.per ft., grade 50 Hi-tensile Crossmembers tilt platform: S6" I-beam x 12.5 lbs per ft., grade 50 Hi-tensile strength on 22" centers
Siderails	C8" x 13.75 lbs. per ft., grade 50 Hi-tensile
Decking	2" nominal oak
Headboard	8" x 3" rectangular tube, full width of trailer
Tie Downs	(8) heavy duty D-rings, 4 per side

Underride guard	Meets "National Highway Traffic Safety Administration" mandates FMCSS-223 & FMVSS-224
Suspension	Hutch 9700 multi-point spring with radius rod axle tracking adjustment, 44,000 lb. capacity.
Axles	(2) 22,500 lbs. capacity with oil bath hubs
Brakes	12-1/4" x 7-1/2" air with "Wabco" anti-lock braking system and spring parking brake
Tires	(8) 215/75R17.5 (H)
Wheels	8 hole, hub piloted
Jack	25,000 lbs., 2 speed landing leg
Hitch	4 position cast steel pintle eye, 1-5/8" stock, 3" I.D.
Lights	Flush mounted LED in rubber grommets Modular wiring harness with 7-way plug
Paint	Black urethane Rust prohibitive undercoating Available: Black, White, Red, Yellow, or Gray



Options

- Additional deck lengths
- Gooseneck
- Paint color matching or galvanizing
- Tire upgrade
- Spare tire/carrier
- Polished aluminum wheels
- Dual 2-speed jacks
- Hydraulic jacks
- Toolbox lid or enclosure
- Air lift axles
- Additional D-rings
- Apitong decking
- Bucket plate/well
- Hubodometer
- Air ride suspension

For more information visit our Website at www.interstatetrailers.com or call 1-800-433-5384