ISO 9001 Quality Management System | WBENC-Certified WBE | THE TRAILER *EXPERTS* ~ SINCE 1974

Product Sheet
Felling Trailers, Inc. 2021
www.felling.com • 1-800-245-2809

1525 Main Street South
Sauk Centre, MN 56378

FT-7 R	Utility Reel

GVWR LBS: 8,050 **GAWR LBS: 7,000** **WEIGHT LBS: 1,920** **CAPACITY LBS: 6,130**

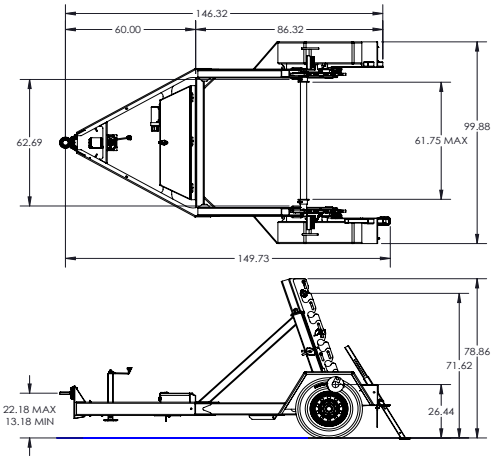

*Shown with optional stabilizer legs.

Feature Name	Standard Features	Std. Qty	UOM
Model	**FT-7 R**	1	
Reel Capacity	Capacity for a 61" X 120" Reel, 2.875" shaft	1	Inches
Reel Capacity	Reel Diameter at lowest position, 23" Reel	1	Std
Overall Length	Overall Length in Feet	12	Feet
Width	100" OD, 62" ID Approx	1	Std
Brakes	Electric, FSA (Fwd Self Adj) On All Axles	1	Std
Tires & Wheels	ST235/80R 16 E, 8 Bolt [16 x 6] Mod	2	Each
Hitch Type	3" Adjustable Lunette Eye/Pintle, [C] 50,000 lb Plate Mount (5/8" Bolt)	1	Std
Jack	7K Drop Leg ** Top Wind **	1	Std
Plug	7 Pole RV	1	Std
Lights	LED Lights (Peterson), Sealed Wiring Harness	1	Std
Trailer Color	Felling Black # CCA945378 (White Felling Decal)	1	Std
Standard	Elec/Hydraulic Pump with 12 V battery in Lockable Enclosure	1	Std
Standard	3/8" Safety Chains, Grade 70	1	Std
Standard	Document Holder	1	Std
GVWR	8,050 lbs	1	Std